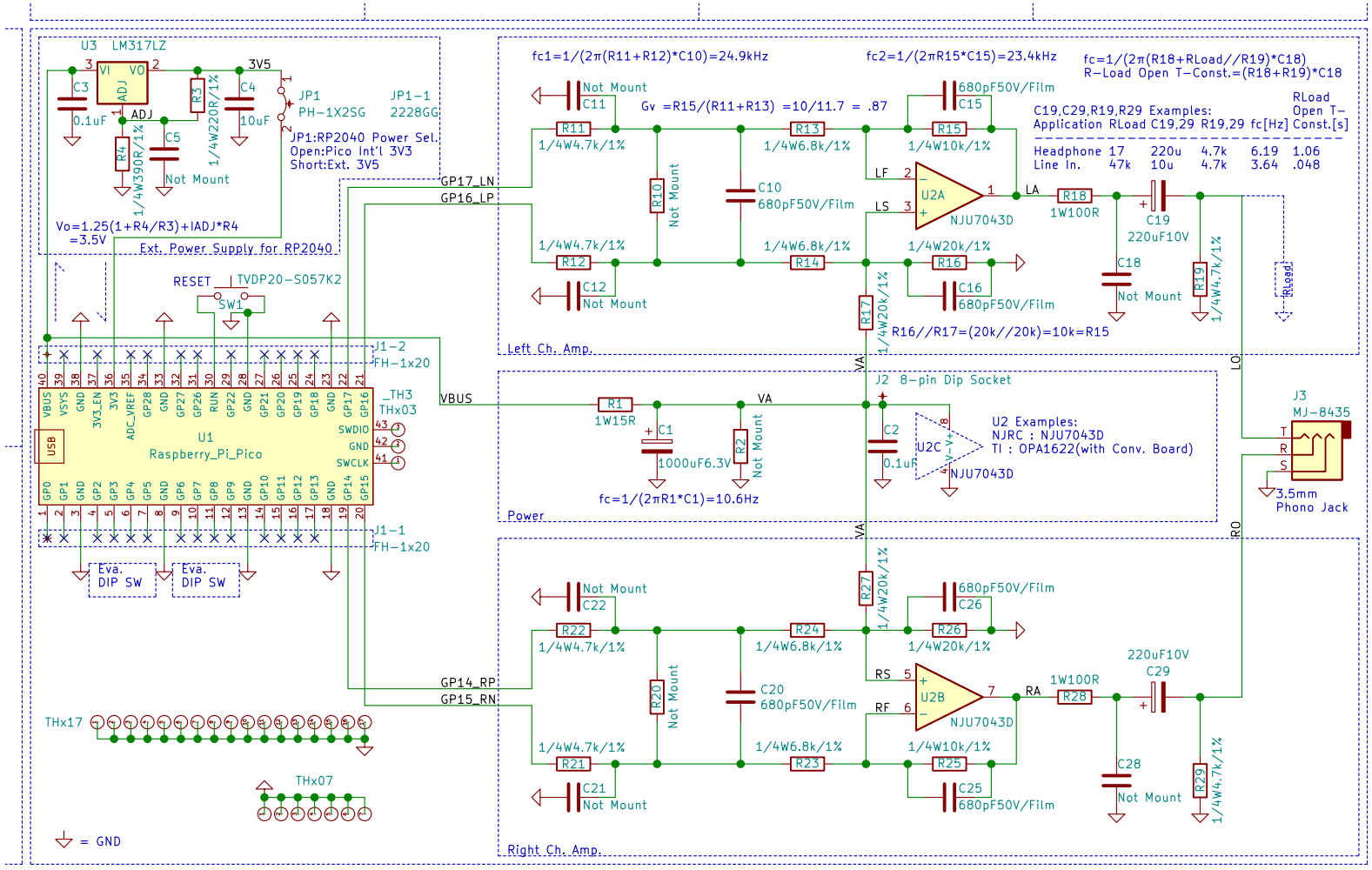

Add. C5 (Option for improved ripple rejection)

Sheet: /
File: pico_pdm_dac_r.sch

Title: Pico PDM DAC

Size: A4	Date: 2021-06-21	Rev: 1.0a
KiCad E.D.A. kicad (5.1.10)-1		Id: 1/1