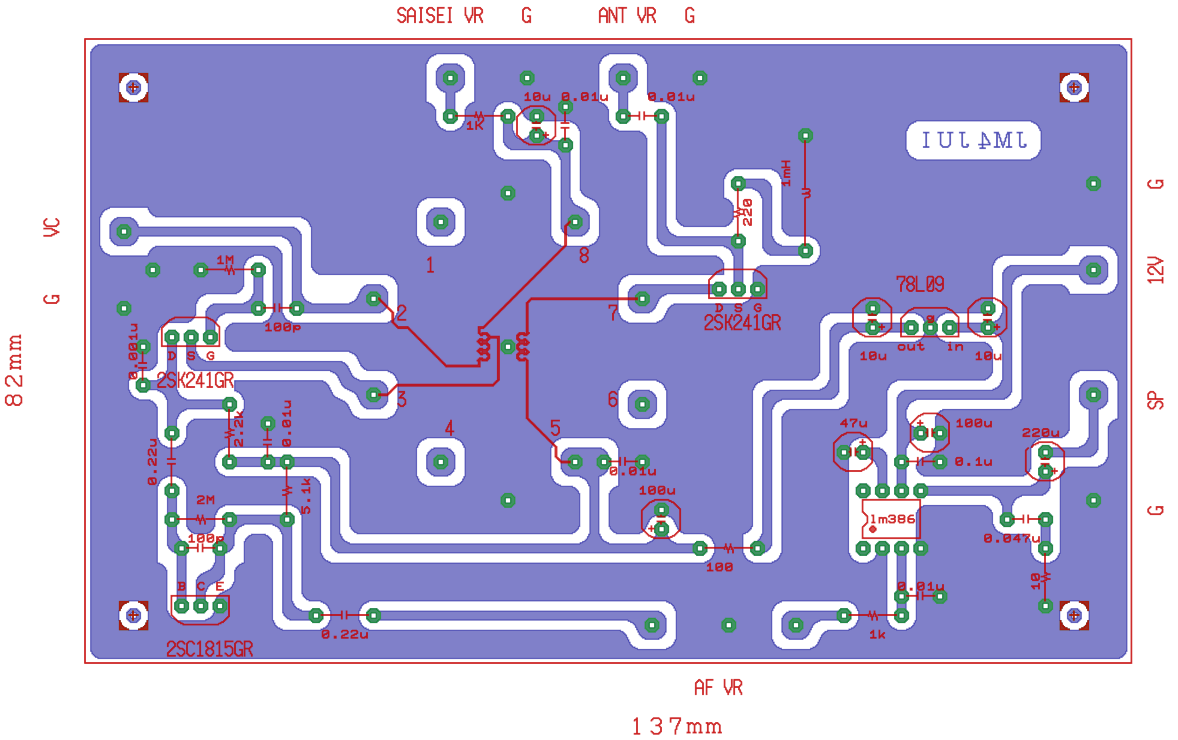
SAISEI VR
G
ANT VR
G
VC
G
82mm
G
12V
SP
G
AF VR
137mm
1WT1N1
10u
0.01u
0.01u
1K
1mH
22u
1M
100p
2SK241GR
D S G
0.001u
2SK241GR
D S G
78L09
10u
out
in
10u
47u
100u
220u
0.1u
0.22u
2.2k
0.01u
5.1u
2M
100p
0.01u
100u
lm386
0.047u
100
0.01u
B C E
2SC1815GR
0.22u
1k
1
2
3
4
5
6
7
8