MOUSE TRAP KUOAMP (Simple-CAD for Win)

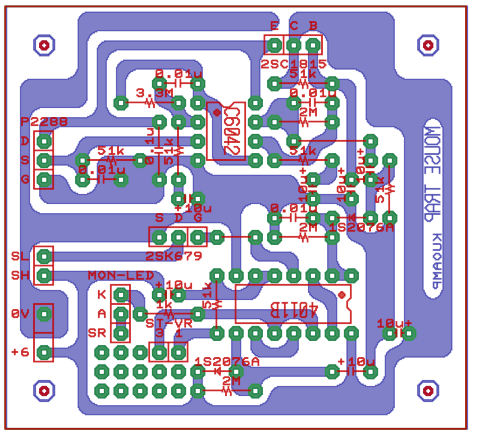

55.88mm

60.96mm