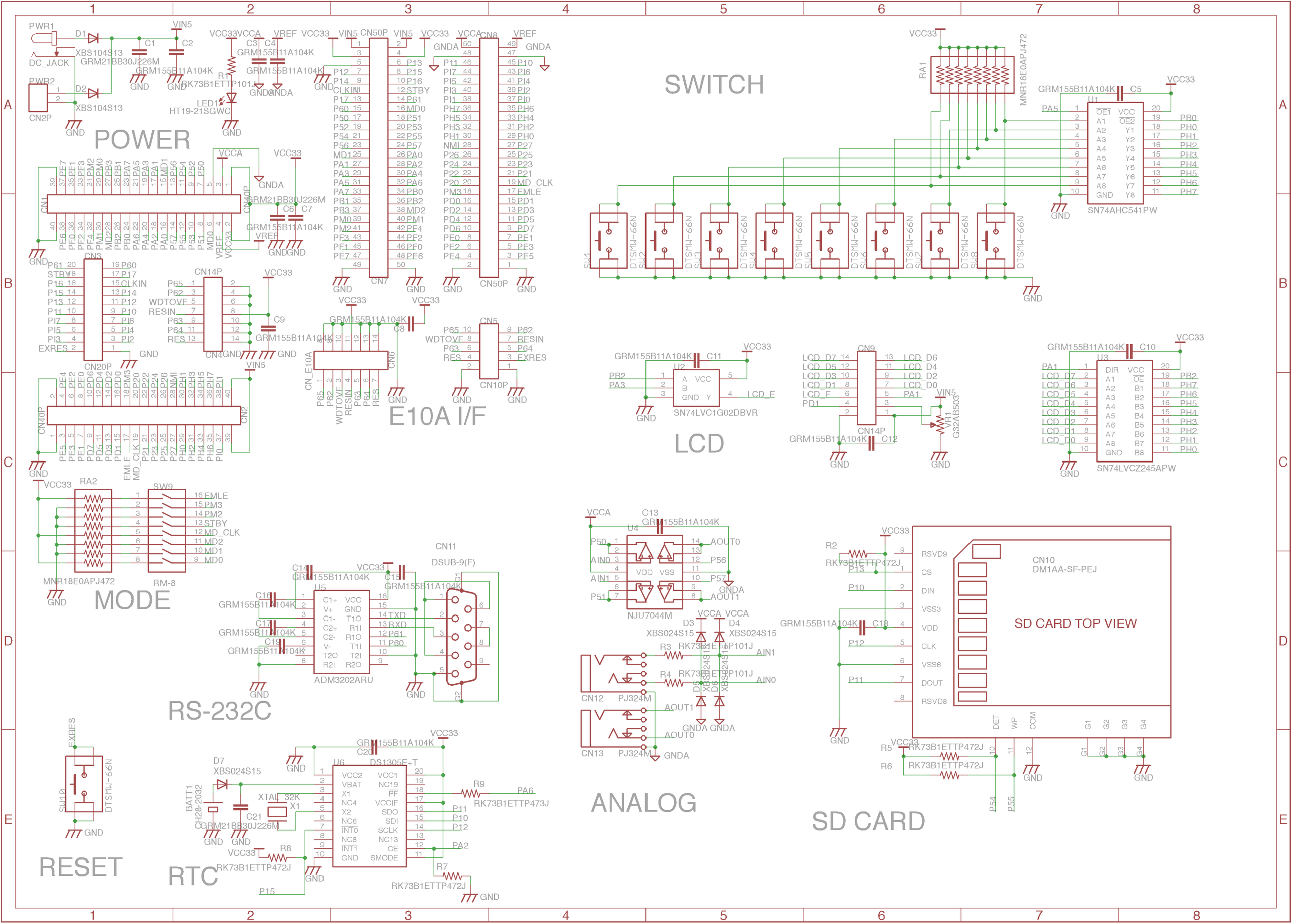
POWER
SWITCH
E10A I/F
LCD
MODE
RS-232C
ANALOG
SD CARD
RESET
RTC
SD CARD TOP VIEW
SN74AHC541PW
SN74LVC1G02DBVR
SN74LVCZ245APW
NJU7044M
ADM3202ARU
DS1305E+T
CN10
DM1AA-SF-PEJ
CN11
DSUB-9(F)
CN50P
CN7
CN8
CN20P
CN14P
CN40P
CN2
CN1
CN3
CN4
CN5
CN6
CN9
CN10P
CN12
CN13
CN2P
PWR1
PWR2
DC_JACK
LED1
HT19-21SGWC
RA1
RA2
MNR18E0APJ472
SW9
RM-8
SW10
DTSMW-66N
BATT1
CH28-2032
XTAL_32K
VR1
G32AB503
VCC33
VIN5
VCCA
GND